Front Left

Front Right

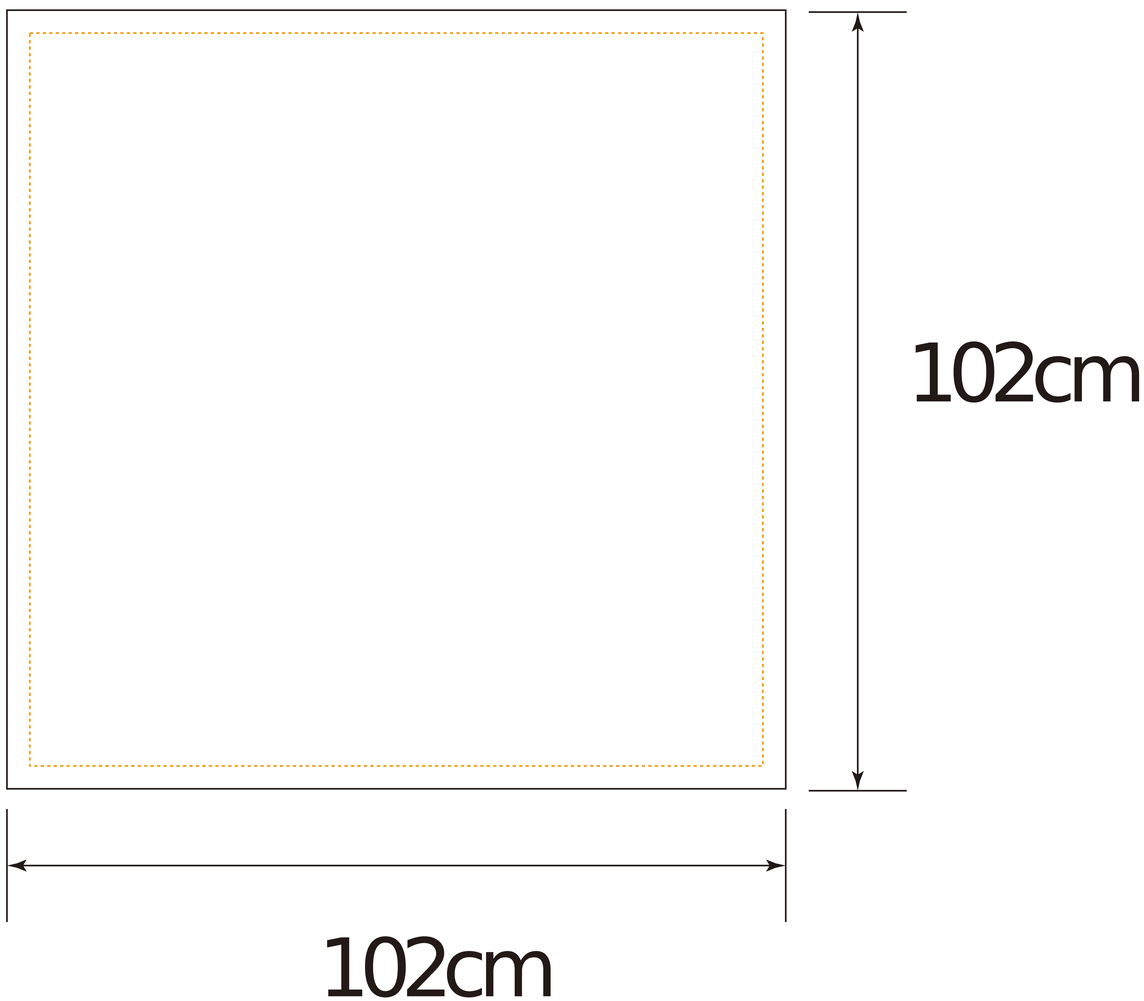

Back Left

Back Right

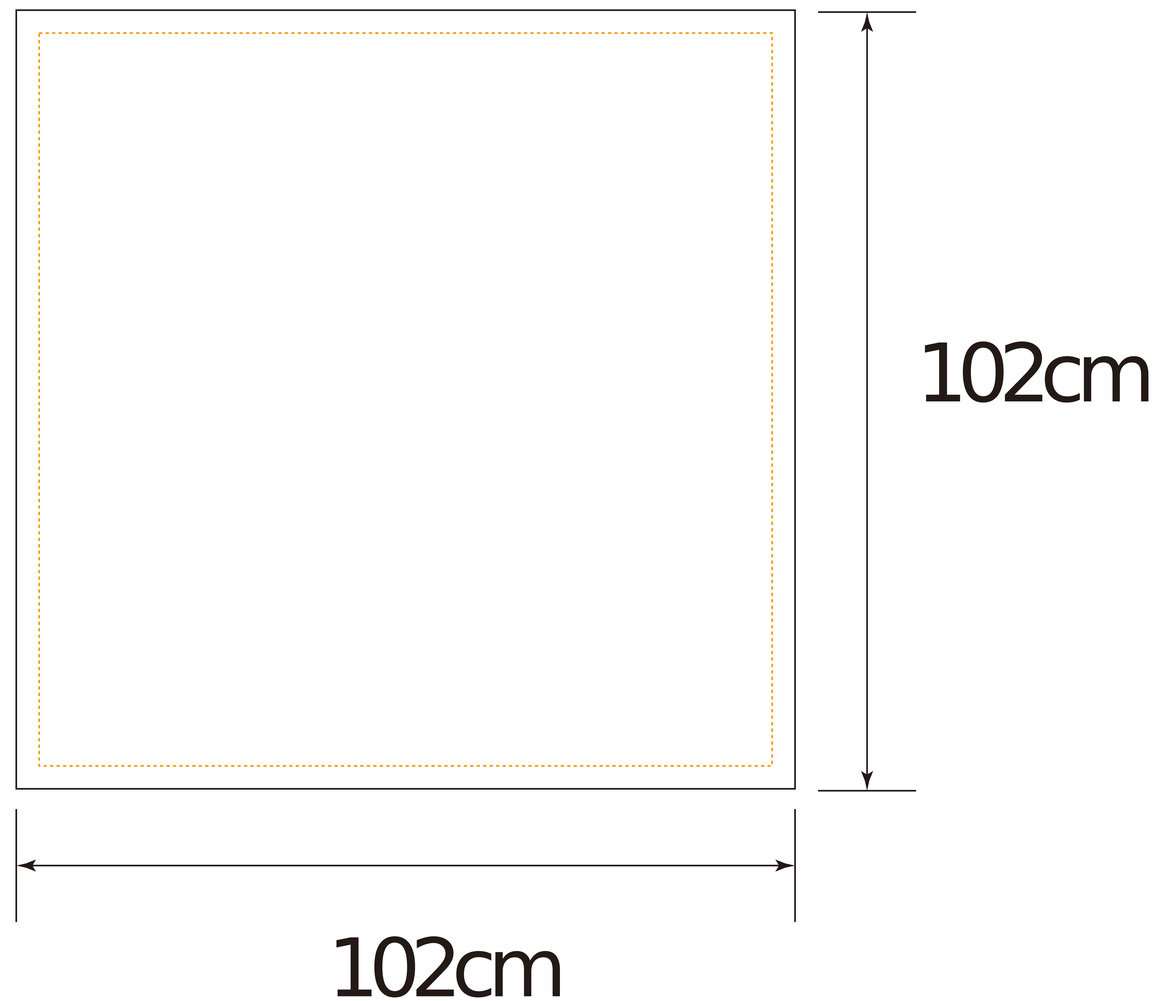

Front Left

Front Right

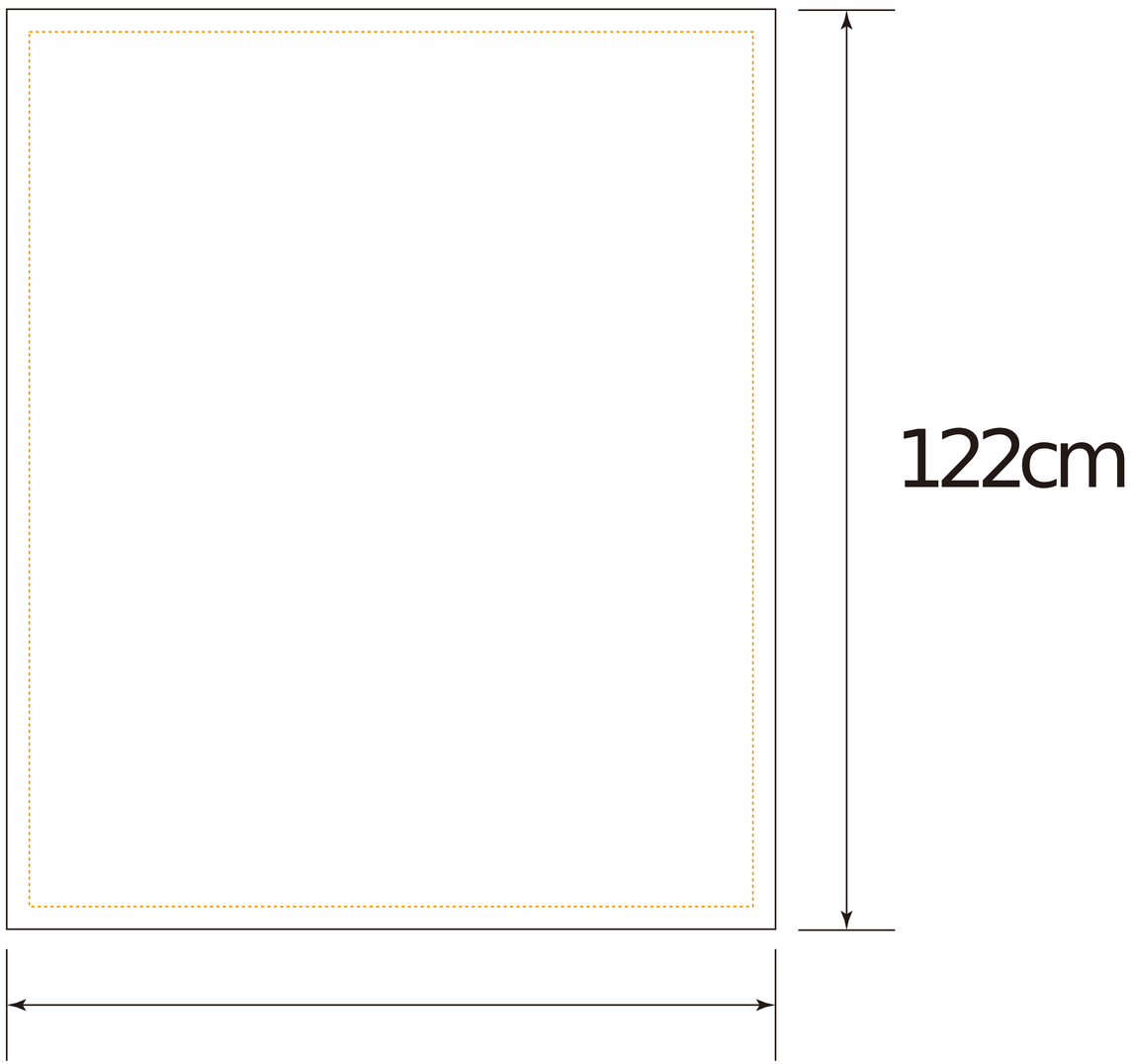

Back Left

Back Right

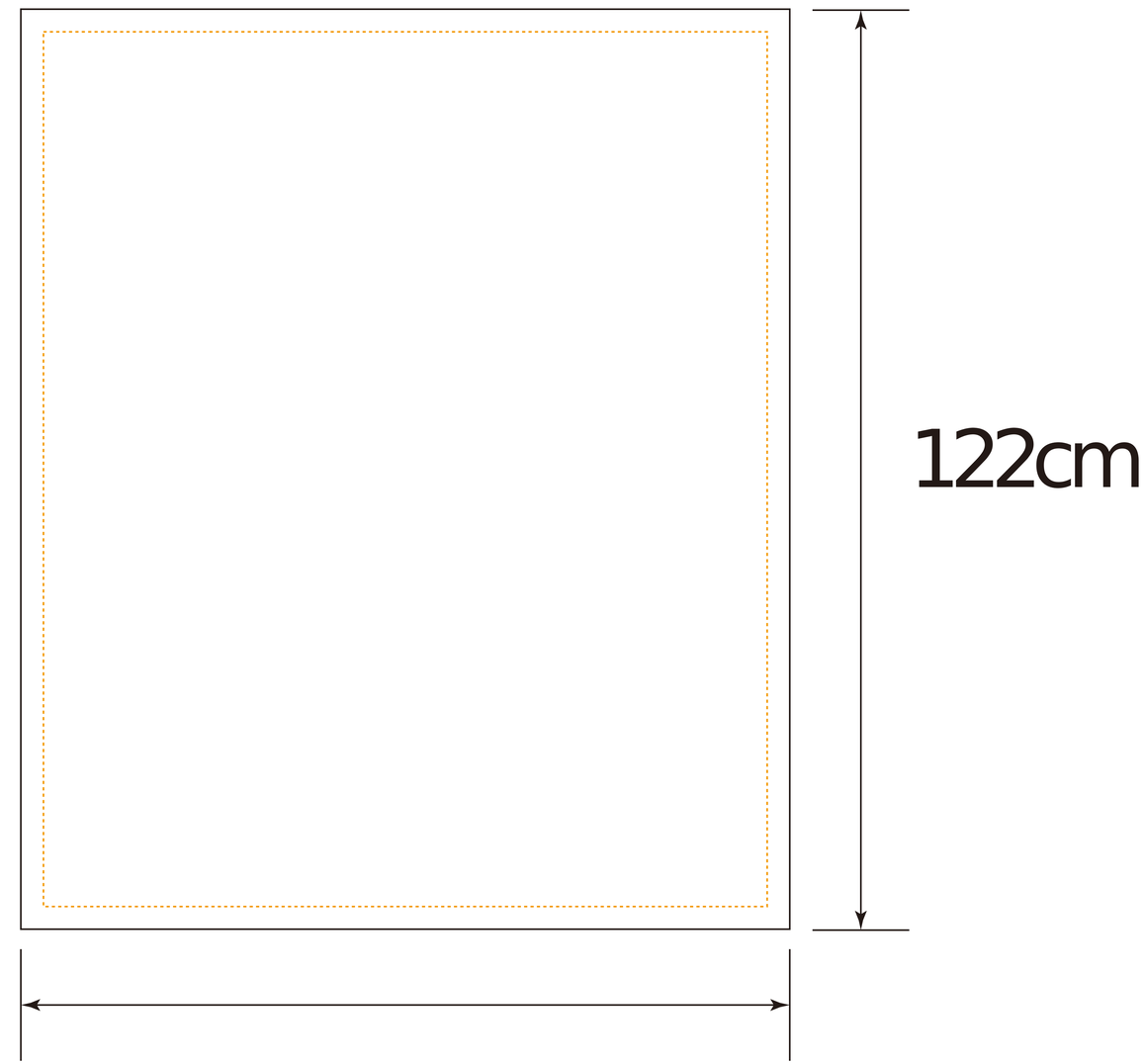

Front Left

Front Right

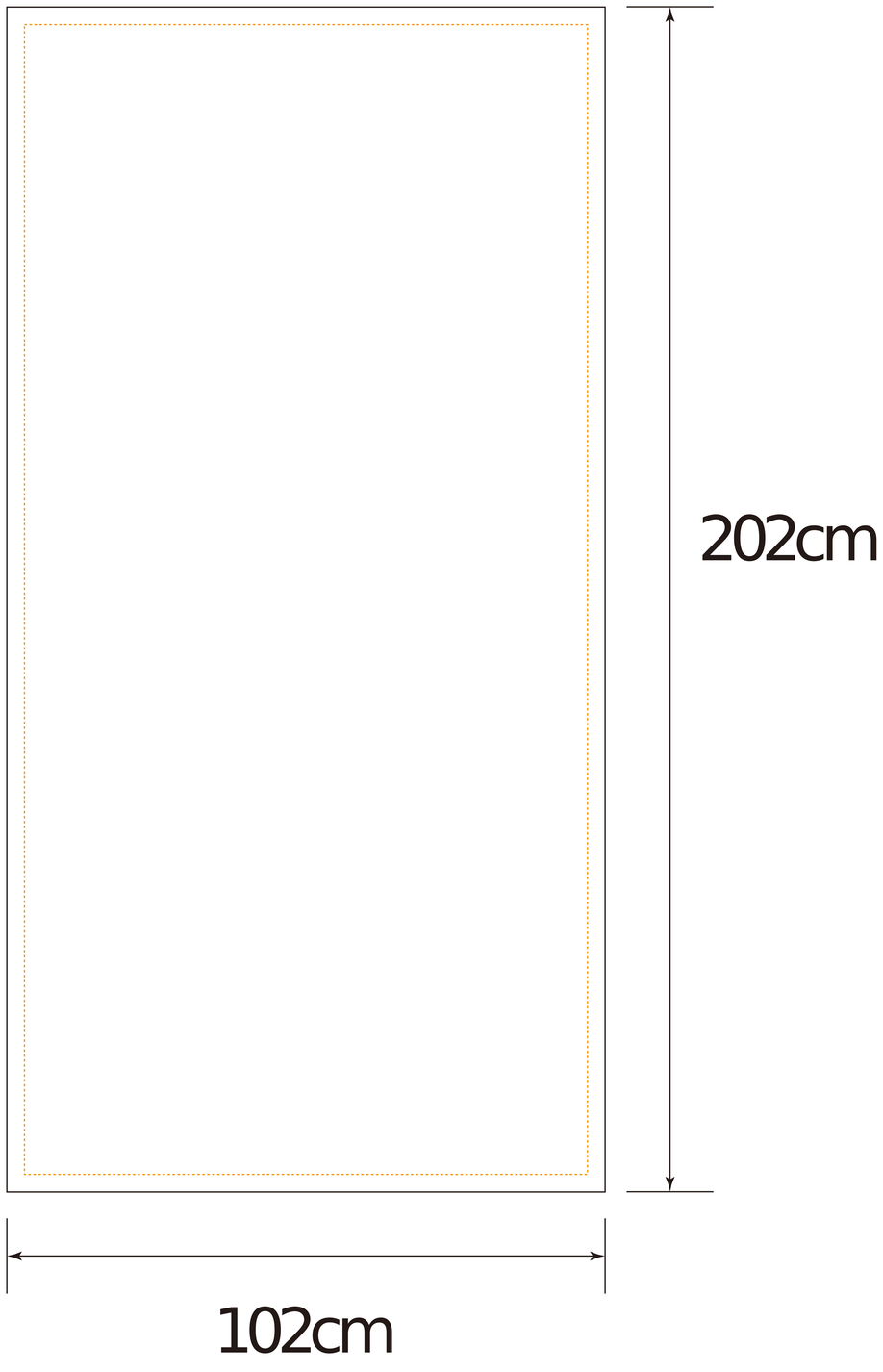

Back Left

Back Right

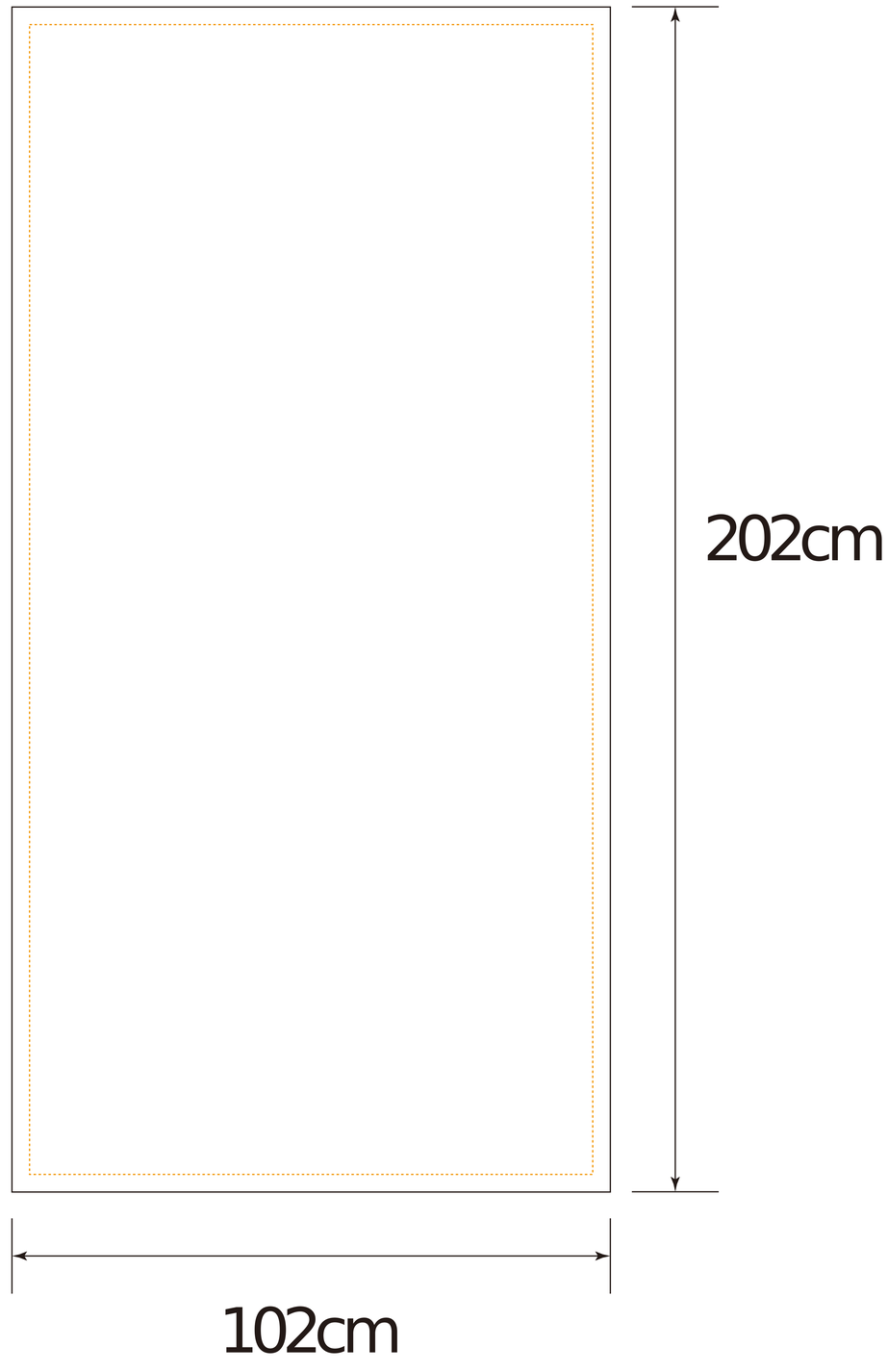

Front Left

Front Right

Back Left

Back Right

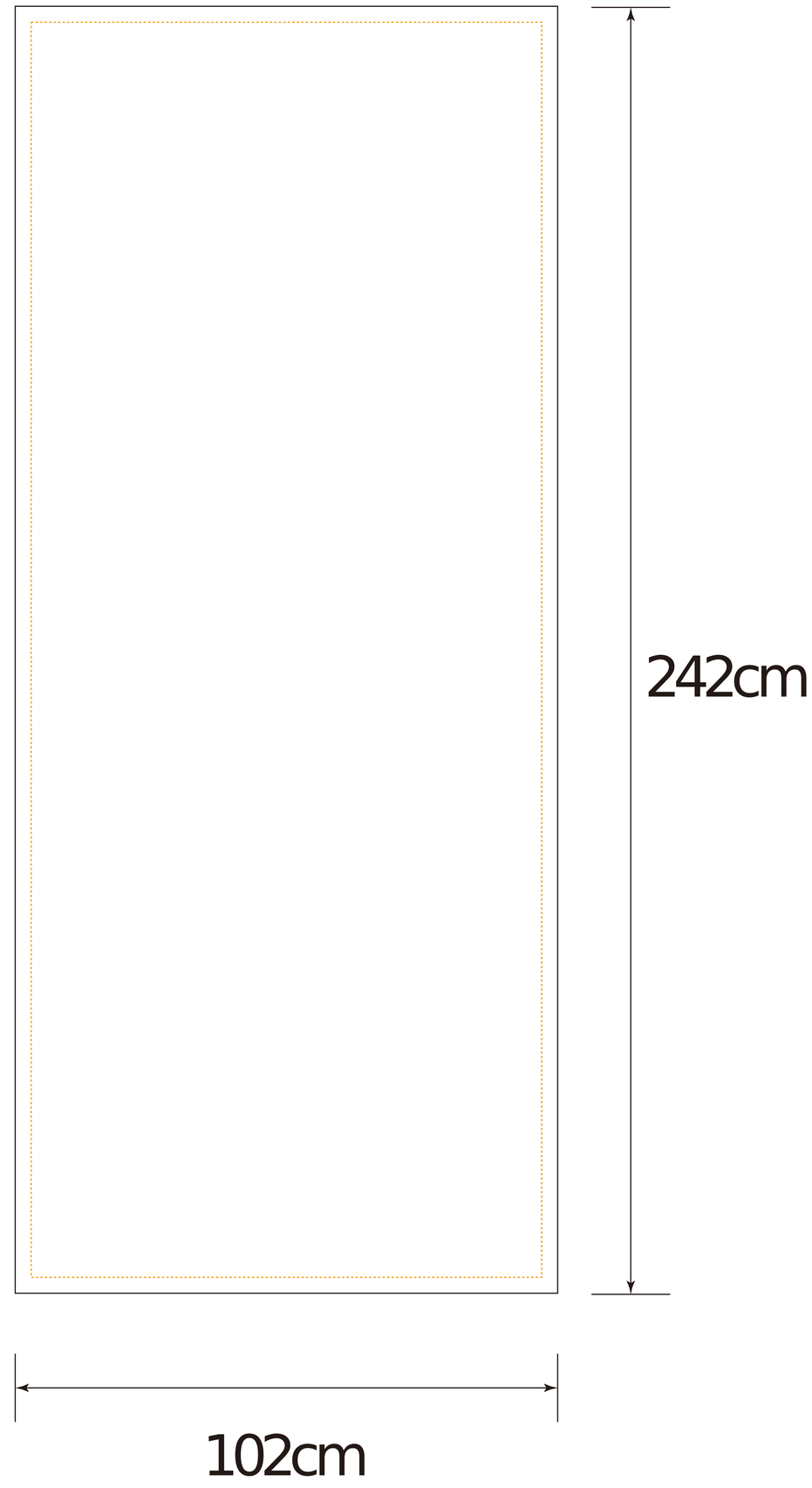

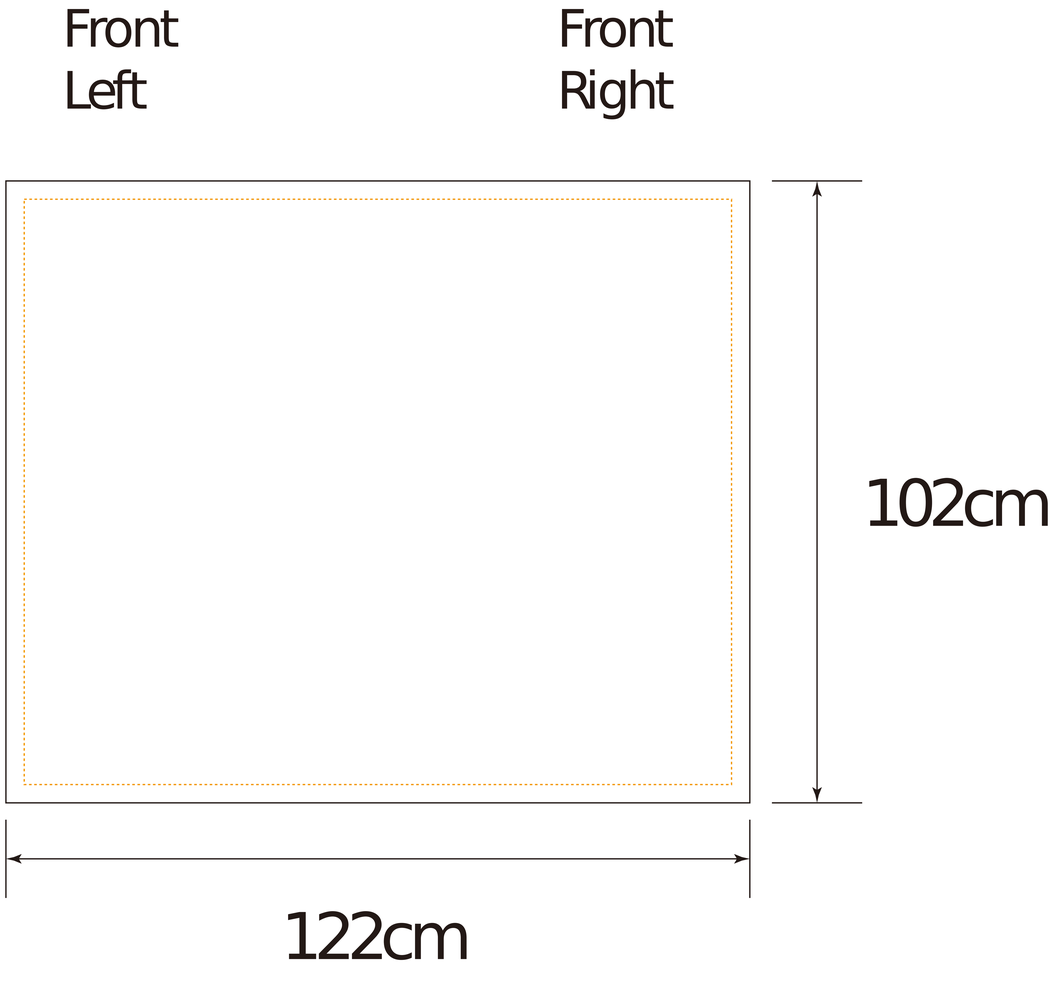
Front
Left
Front
Right
102cm
122cm

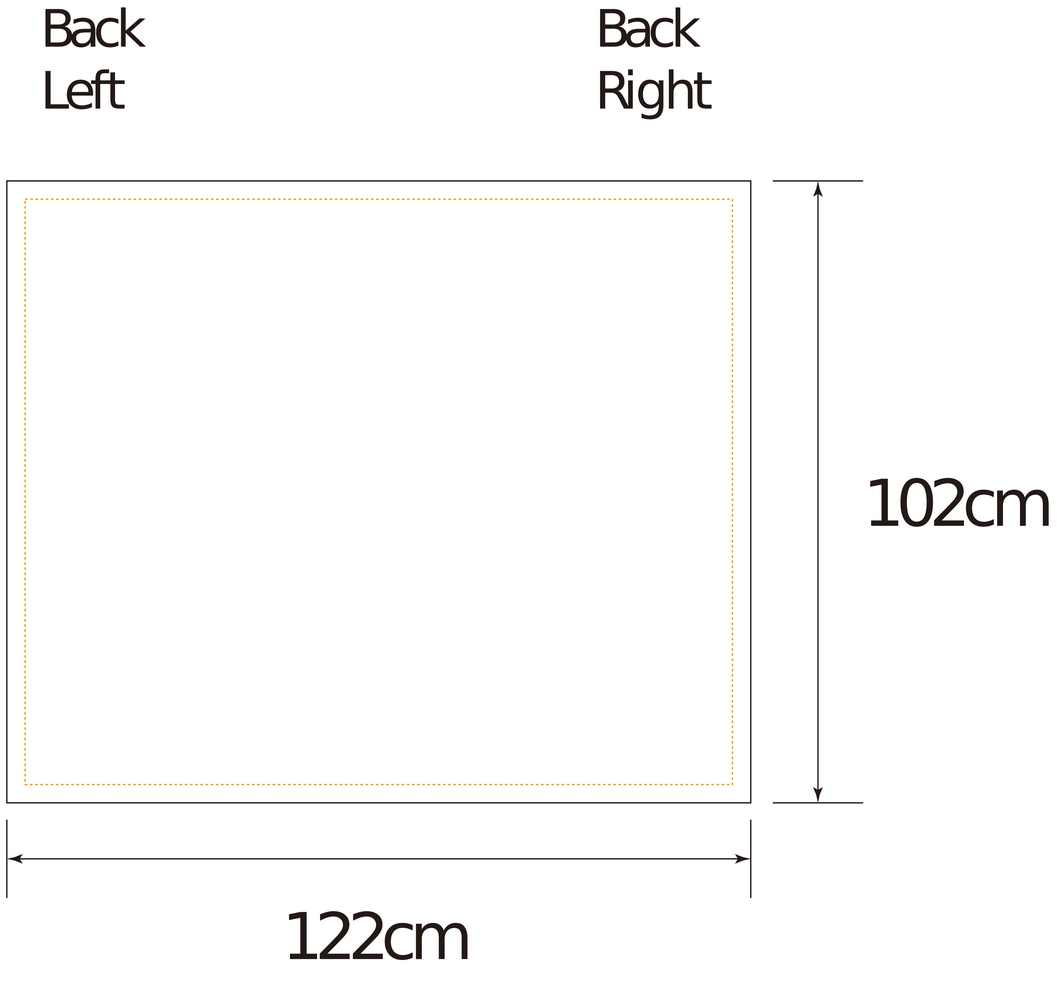
Back
Left
Back
Right
102cm
122cm

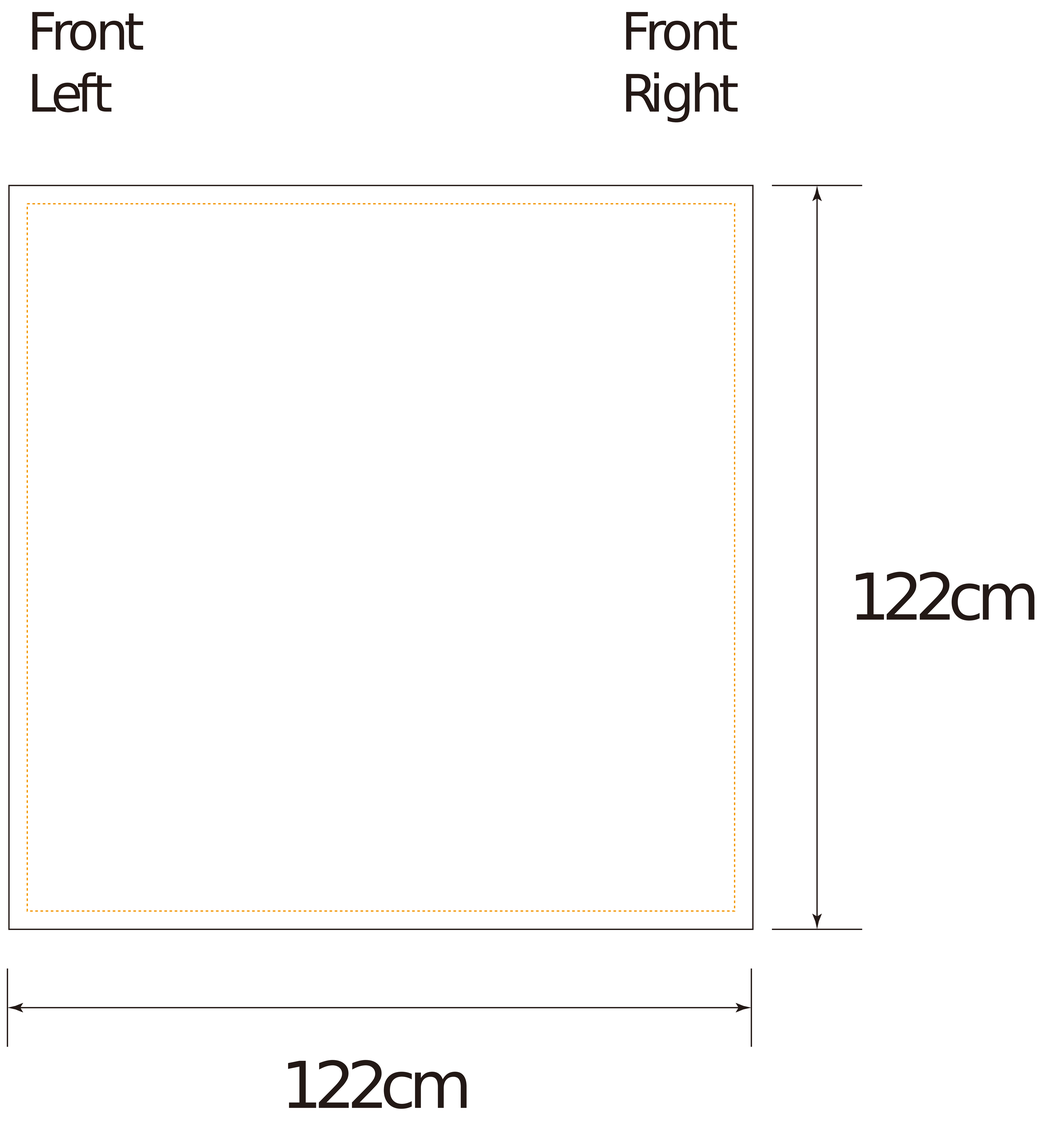
Front
Left
Front
Right
122cm
122cm

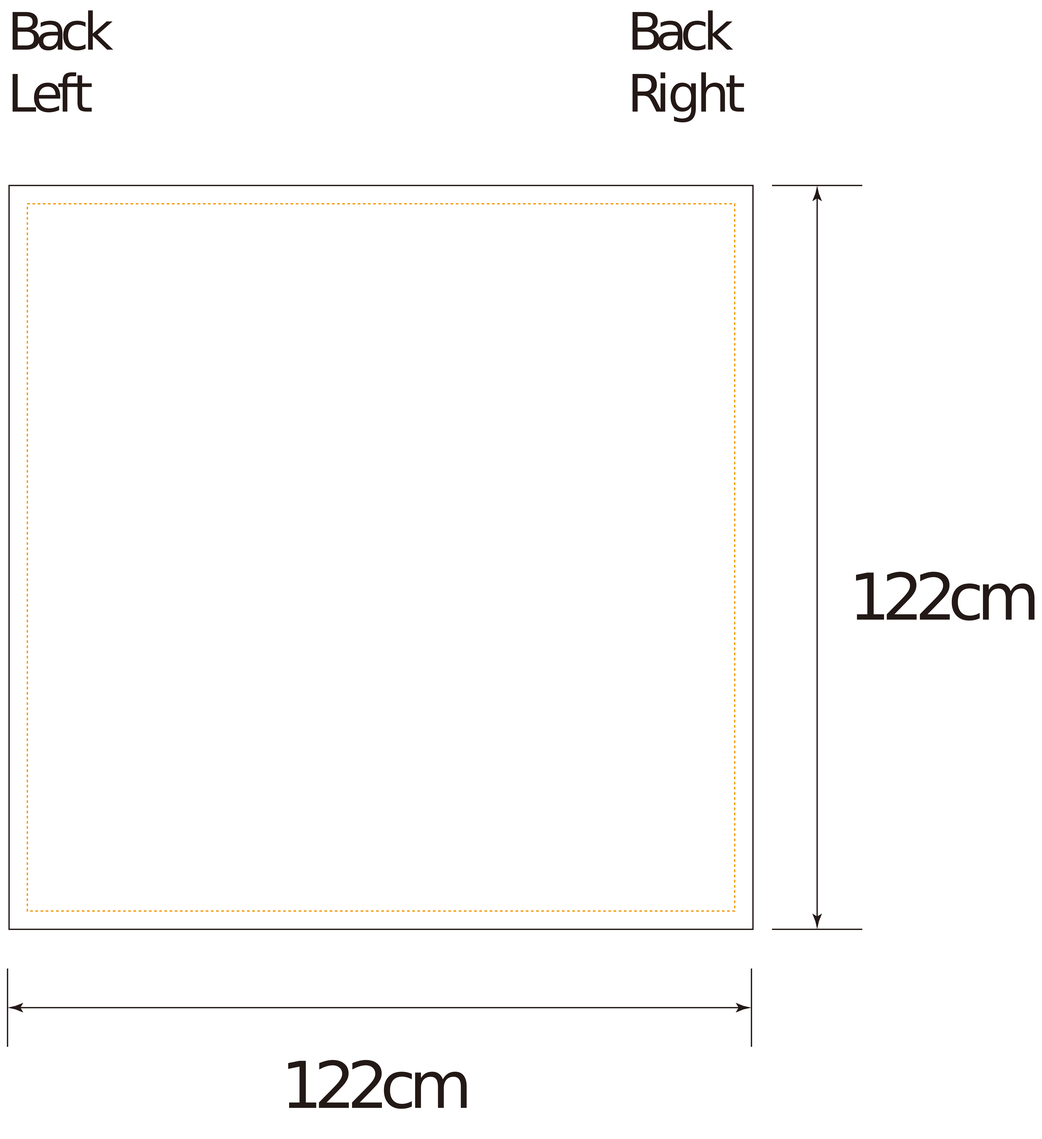
Back
Left
Back
Right
122cm
122cm

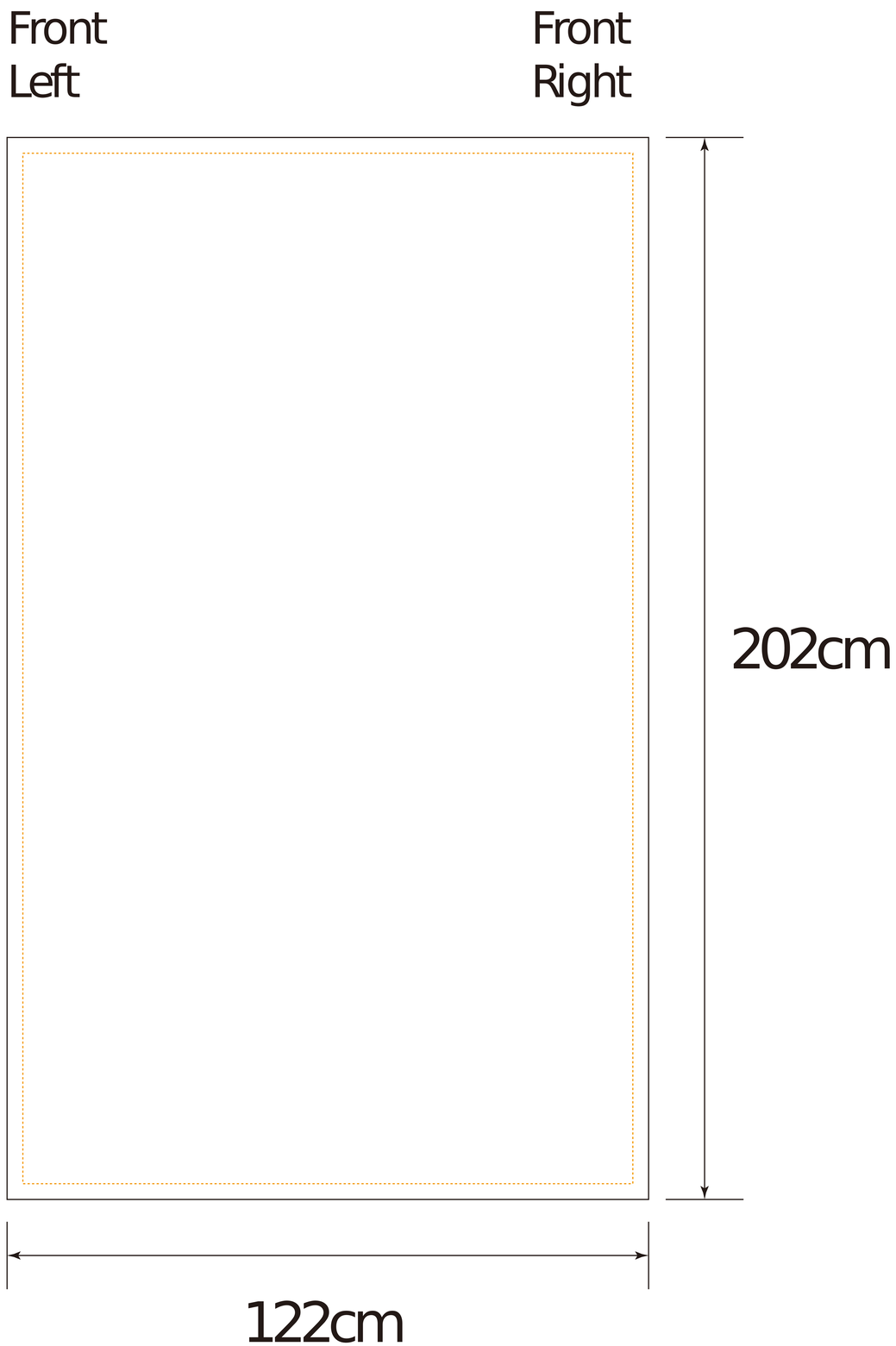
Front
Left
Front
Right
202cm
122cm

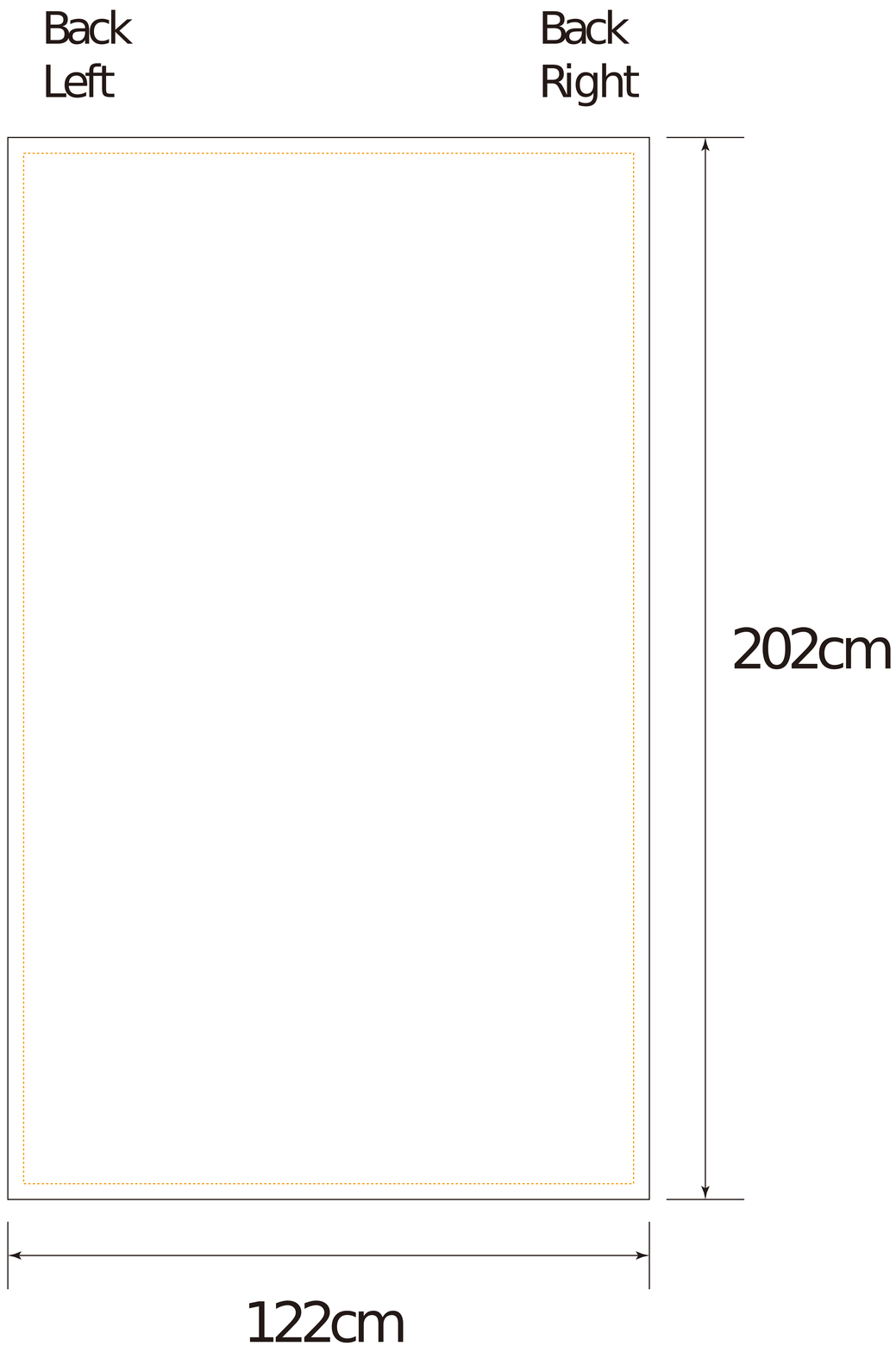
Back
Left
Back
Right
202cm
122cm

Front
Left
Front
Right
242cm
122cm

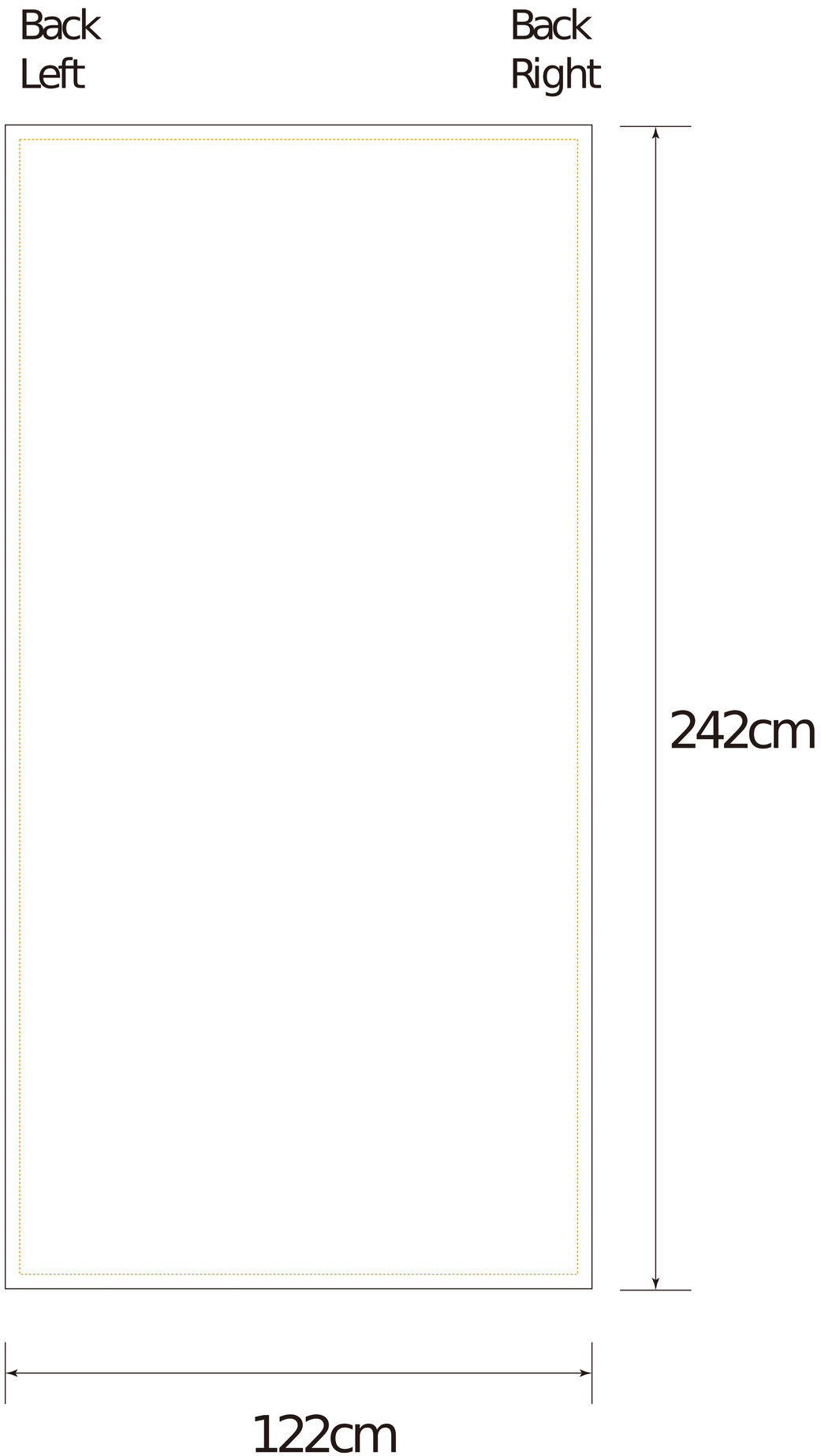
Back
Left
Back
Right
242cm
122cm